Series 8, Wall-mounted canopy rangehood, 90 cm, clear glass black printed
DWK91LT65

DWZ0BX6K1	Chimney extension 1000 mm
DWZ0BX6L1	Chimney extension 1500 mm
DWZ1BK1B6	Clean Air Plus odor filter (replacement)
DWZ1BK1I6	Clean Air Plus recirculation kit
DWZ1BK1P1	Long Life odor filter (replacement)
DWZ1BK1R1	Long Life recirculation kit (chimless)
DWZ1BK1S1	Long Life recirculation kit
DWZ1BK1V6	Clean Air Plus recirc. kit (chimless)
HEZG9AS00S	Adapter

The premium inclined rangehood, with superior performance and outstanding design

- **EcoSilence Drive**: the powerful, energy-saving drive for hoods.
- **Cooktop-based Hood Control**: convenient operation of the hood via your hob.
- **Temperature Light**: create perfect kitchen ambience with adjustable LED lighting.
- **Home Connect**: control your hood via the app.

Typology:	Wall-mounted
Length electrical supply cord:	130.0 cm
Height of the chimney:	420-663/457-750 mm
Height of product, without chimney:	450 mm
Minimum distance above an electric cooktop:	600 mm
Minimum distance above a gas cooktop:	650 mm
Net weight:	25.9 kg
Type of control:	Electronic
Number of power settings:	3-stages + 2 intensive settings
Max. air extraction:	441 m^3/h
Boost position output recirculating:	944 m^3/h
Max. air recirculation:	437 m^3/h
Boost position air extraction:	1007 m^3/h
Number of lights:	2
Noise level:	51 dB(A) re 1pW
Diameter of air outlet:	150 mm
Grease filter material:	Washable stainless steel
EAN code:	4242005307418
Connection rating:	250 W
Fuse protection:	10 A
Voltage:	220-240 V
Frequency:	50; 60 Hz
Plug type:	Gardy plug w/ earthing
Installation typology:	Wall-mounted

4 242005 307418

Series 8, Wall-mounted canopy rangehood, 90 cm, clear glass black printed
DWK91LT65

The premium inclined rangehood, with superior performance and outstanding design

Design:

- Inclined design
- Wall-mounted
- Suitable for ducted or re-circulated extraction
- In recirculation operation chimless use possible
- For recirculation operation Clean Air Plus recirculation kit (not included with appliance) needed.

Features:

- EcoSilence Drive: Efficient BLDC technology
- 2, LED, adjustable colour temperature lights
- SoftLight: the lighting elements switch on and off smoothly.
- Dimming function: the brightness of the lighting elements can be adjusted.
- Colour Temperature: 3500 K
- Light Intensity: 422 lux
- Ambient Light
- Powerboost position: Rangehood can be set to a defined extraction boost position in order to increase the catch rate of particularly strong cooking smells and large amounts of steam.
- 2 capture areas: front side and bottom side
- 3 metal grease filter(s).

Comfort Features:

- PerfectAir sensor: Automatic Sensor-based performance control for best results
- Backlit DirectSelect control
- 3 power levels + 2 intensive levels
- Automatic reset from intensive to normal setting after 6 min
- Saturation display for filters
- after run automatic: 10 minutes

Digital Features:

- Home Connect: operate, monitor and set preferences of your rangehood via smartphone or tablet.
- Cooktop-based rangehood control: automatically activates the rangehood when cooking, thanks to the WiFi connection of the rangehood and a suitable cooktop.
- Voice Control enabled via popular voice assistants
- Customisable Performance Profiles: choose between standard, performance or silence profiles to increase the extraction rate or reduce the fan noise via Home Connect App
- Favourite Button: directly access favourite functions with a configurable button (available with connected Home Connect account).
- Smart home trigger, via Favourite button (available with connected Home Connect account): open up the smart universe from your rangehood (partner service required).
- LED light with adjustable light temperature: Allows you to adapt the light temperature to your personal needs via Home Connect App
- Ambient Light with more than 16 million colour options for inspiring illumination via Home Connect App
- Updateable appliance (available with connected Home Connect account): keep appliance always up to date with latest status of software.

Cleaning Comfort:

- Extremely large opening angle for an easy filter accessibility and easy cleaning.
- Easy to clean smooth surfaces and materials.
- Metal grease filter dishwasher-safe

Performance Exhaust:

- According to EN 61591 and EN/ IEC 60704-2-13 your appliance can achieve the following values in exhaust mode: Speed 1: extraction rate 228 m3/h ; noise level 35 dB (A) re1pW Speed 2: extraction rate 325 m3/h ; noise level 43 dB (A) re1pW Speed 3: extraction rate 441 m3/h ; noise level 51 dB (A) re1pW Intensive 1: extraction rate 753 m3/h ; noise level 65 dB (A) re1pW Intensive 2: extraction rate 1007 m3/h; noise level 70 dB (A) re1pW

Performance Recirculation:

- According to EN 61591 and EN/ IEC 60704-2-13 your appliance can achieve the following values in recirculation mode with Clean Air plus recirculation kit, for installation with chimney (available as optional accessory): Speed 1: extraction rate 211 m3/h ; noise level 42 dB (A) re1pW Speed 2: extraction rate 315 m3/h ; noise level 51 dB (A) re1pW Speed 3: extraction rate 435 m3/h ; noise level 59 dB (A) re1pW Intensive Speed 1: extraction rate 752 m3/h ; noise level 72 dB (A) re1pW Intensive Speed 2: extraction rate 964 m3/h ; noise level 78 dB (A) re1pW

Technical Information:

- Power rating: 250 W
- Voltage: 220 - 240 V
- Made in Germany: produced at a CO2 neutral production site
- Environmentally friendly packaging

Planning and Installation Information:

- Dimensions exhaust air (HxWxD): 855-1098 x 890 x 447 mm
- Dimensions recirculating (HxWxD): 892-1185 x 890 x 447 mm
- Diameter pipe Ø 150 mm (Ø 150 mm enclosed)
- Electrical cable length 1.3 m
- with one-way flap: prevents outside air from entering your kitchen

Series 8, Wall-mounted canopy rangehood, 90 cm, clear glass black printed
DWK91LT65

Measurements in mm
Appliance in exhaust air mode

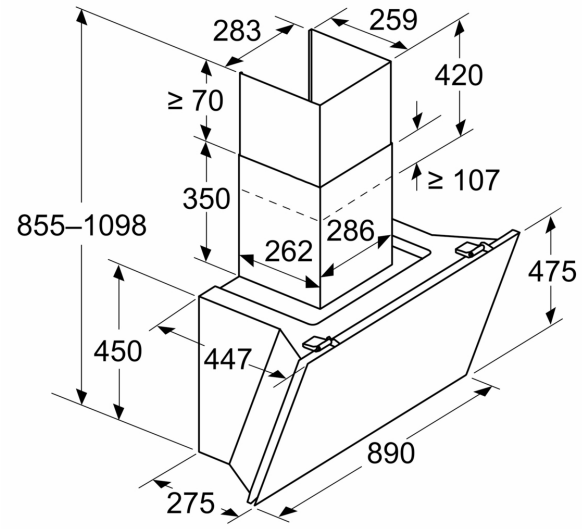

Measurements in mm
Appliance in circulated air mode

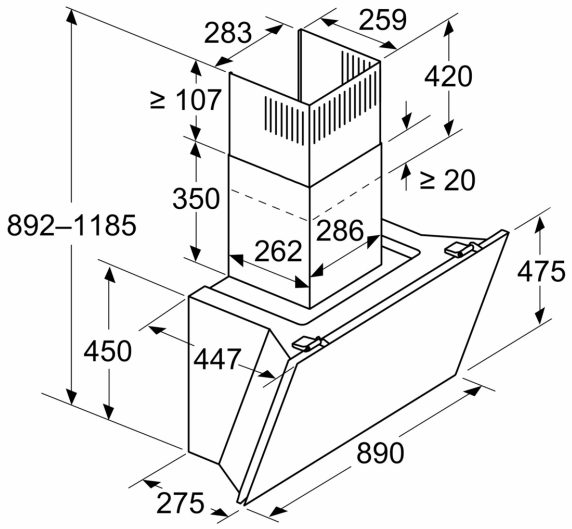

Measurements in mm
Appliance in circulated air mode without duct

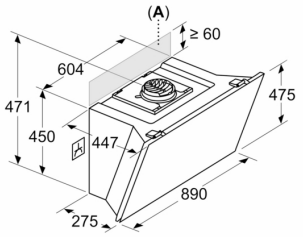

Socket can be fitted to the side of or above the appliance

A: Socket only outside the marked area

Measurements in mm

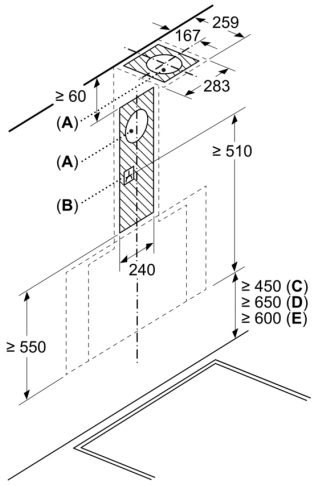

A: Exhaust-air outlet
B: Socket
C: Electric
D: Gas - from upper edge of pan support

E: Electric - for Australia and New Zealand

Measurements in mm
Wall installation with chimney

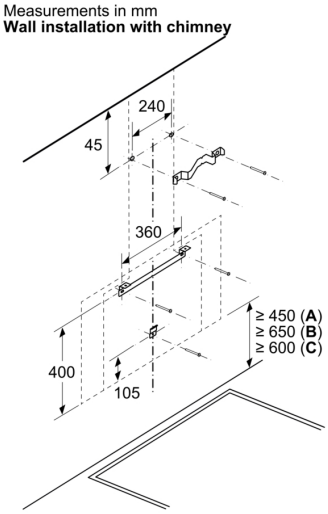

A: Electric

B: Gas - from upper edge of pan support

C: Electric - for Australia and New Zealand

Measurements in mm

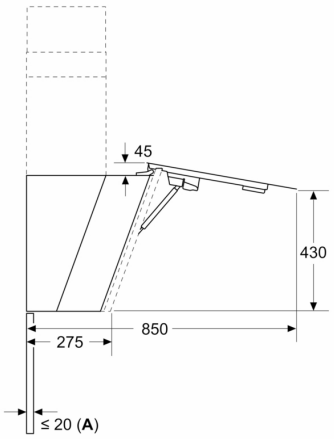

A: Max. back wall thickness

Measurements in mm

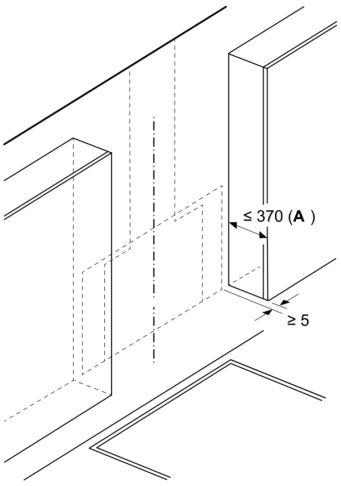

A: Max. depth of side upper cabinets (incl. door) due to installation of glass plate

Appliance must be installed before upper cabinets, if these are deeper than 370 mm